M0DGQ

9MHz IF strip

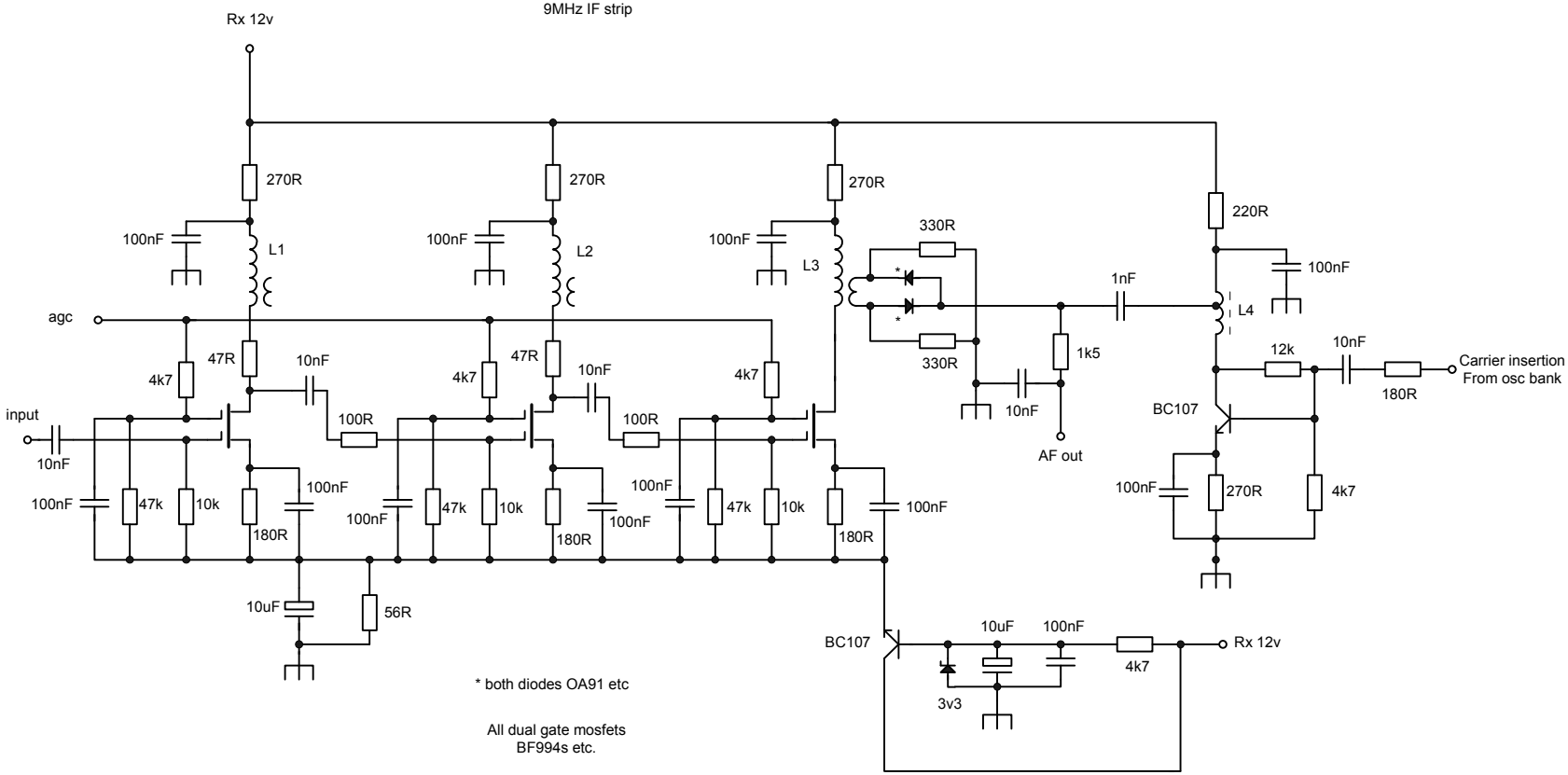

* both diodes OA91 etc

All dual gate mosfets
BF994s etc.

L1, 2, 3 interstage 10.7 MHz IF transformer with additional 10p across primary. L3 lo Z sec, red core ok.

L4 4t bifilar on ferrite bead